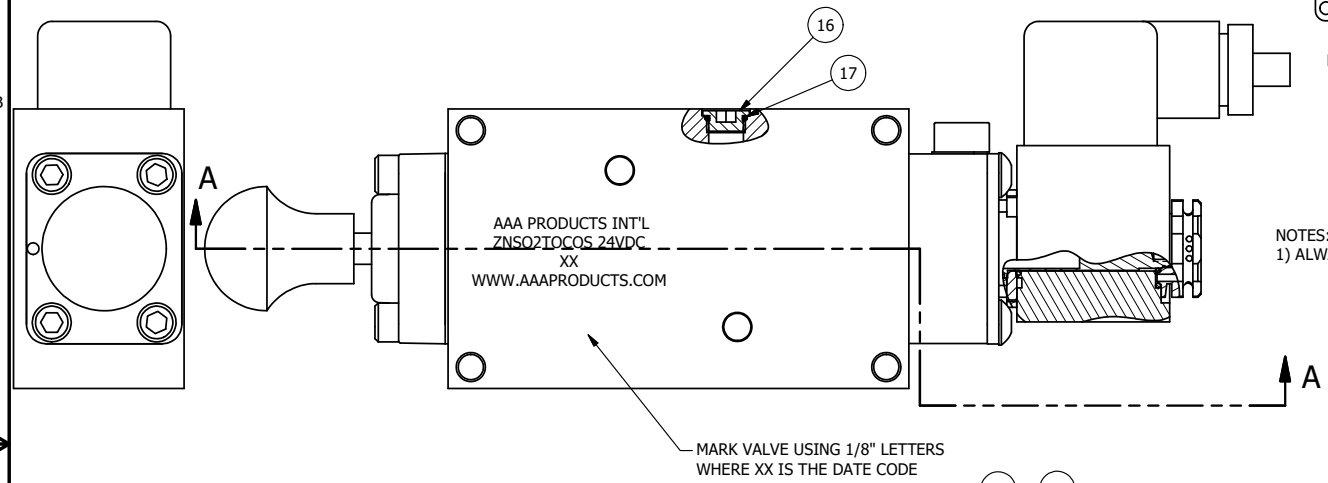

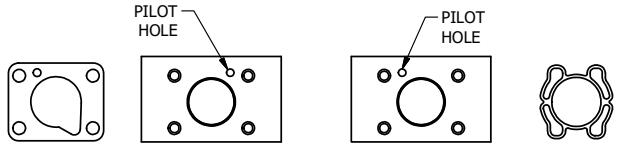

POSITION GASKET TO SEAL PILOT HOLE ON SIDE 'B' ONLY.

ALIGN PILOT AND SLOT IN ADAPTOR WITH GASKET IN BETWEEN SIDE 'A' ONLY FOR EXTERNAL PILOT OPERATION - ROTATE ADAPTOR 180 DEGREES. REMOVE 1/8" NPTF PLUG AND SUPPLY 50-150 PSI TO 1/8" NPTF PILOT PORT IN ADAPTOR.

NOTES:
1) ALWAYS GIVE VALVE MODEL AND PART NUMBER WHEN ORDERING PARTS.

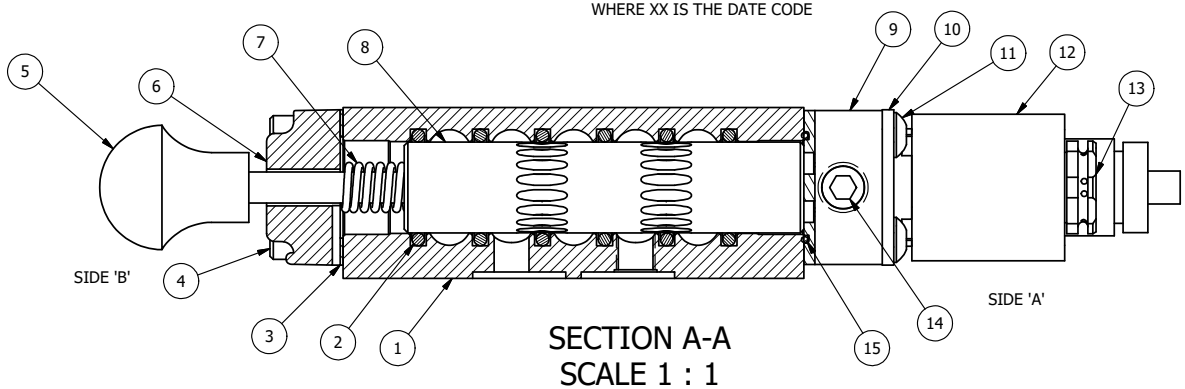

SECTION A-A
SCALE 1 : 1
VIEW FROM 3 PORT SIDE

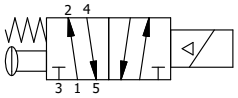

FLG	QTY	PART NO	DESCRIPTION
20	1	ZNSPK-2	KIT - SUBPLATE MOUNTING, BRASS NAMUR, (2 EA V-618-SS SCREW, 2 EA V-565 O-RING)
19	1	V-607	O-RING, VITON, 75 DURO, 14MM X 1MM, IP67 NUT SEAL
18	2	V-606	O-RING, VITON, 75 DURO, 8MM X 1MM, IP67 STEM SEAL
17	1	V-548	O-RING, BUNA-N, 70 DURO, 6MM X 1MM, NAMUR PLUG
16	1	V-547	PLUG, 360 HALF HARD BRASS, NAMUR VALVE
15	1	EMG3	GASKET - END MOUNT SOLENOID, BUNA-N, 1/4" & 3/8" VALVES
14	1	V-19-SS	PLUG, SOCKET PIPE 1/8"-27 NPT, 7/8 TAPER, PLAIN, FLUSH SEAL, STAINLESS STEEL
13	1	V-562	NUT, SOLENOID, SIDE EXHAUST
12	1	V-612-3	ATEX COIL 24 VDC WITH 3 METER CORD. NASS # 1215 30.1-001/6896.
11	4	V-584-SS	SCREW, 10-24 X 1, BUTTON HEAD SOCKET CAP, 18-8 OR 303 SS
10	1	SEC3-7	PLATE, RE-INFORCEMENT, SOLENOID, STAMPED, 304 STAINLESS
9	1	V-599-1	SOL OPER, END MOUNT, LOCKING O'RIDE
8	1	AY-S3-SIK	ASSEMBLY - SPOOL INDICATOR, THREADED, 1/4" & 3/8" VALVE
7	1	CS3	SPRING - RETURN, (EXCEPT HO, KO & PO) 1/4" & 3/8" VALVES
6	1	SEC3-4	END CAP, VENTED, INDICATOR PIN, STAINLESS STEEL, 1/4" & 3/8" VALVES
5	1	V-570	KNOB,BLACK (BRASS 1/4-20 INSERT), OS OPTION
4	4	V-38-SS	SCREW, 10-24 X 3/4, SOCKET HEAD CAP, 18-8 SS
3	1	ECG3	GASKET - END CAP, 1/4" & 3/8" VALVE
2	6	V-39	O-RING, VITON, STD BODY, 1/4" & 3/8" VALVES
1	1	Z2-11	BODY - BRASS, UPPER PILOTS (BUTTON BLEEDER), 1/4" NAMUR

LIMITS ON DIMENSIONS UNLESS OTHERWISE SPECIFIED
2-PL DECIMAL ± .01
3-PL DECIMAL ± .005
FRACTIONAL ± 1/64
ANGULAR ± 1/2'

AAA PRODUCTS INTERNATIONAL
7114 Harry Hines Blvd
Dallas, TX 75235

DRAWN: RMcKenna DATE: 3/23/2020
CHECKED: KWaite DATE: 3/23/2020
SCALE: 1 : 1 SHEET: 1 OF 1
RELEASED: HWomack DATE: 3/23/2020

TITLE: 1/4" NAMUR, SNGL SOL, 2 POS, SPR RTRN, ATEX, 24VDC, BR/SS, LCKNG OVRD, SIDE VENT, THD PIN

PART NO.: ZNSO2TOCOS 24VDC

REV.:

THE INFORMATION CONTAINED WITHIN THIS DOCUMENT IS PROPRIETARY TO AAA PRODUCTS AND MAY NOT BE DISCLOSED WITHOUT PRIOR WRITTEN CONSENT

D:\Engineering\Product\Valves\Assembly\Standard\ZSO\DWG\ZNSO2TOCOS 24VDC.dw